Spicy Question #41

Calculator allowed

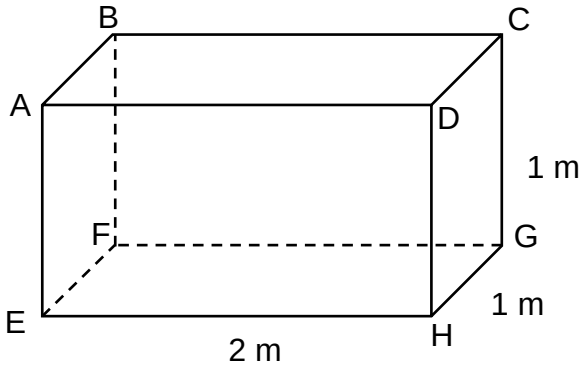

ABCDEFG is a cuboid with a density of 0.1 g/cm^3

A cylindrical hole is then cut into the face ABCD.
An example of how this could look is shown in the diagram below.
The cylinder has height h and radius r.

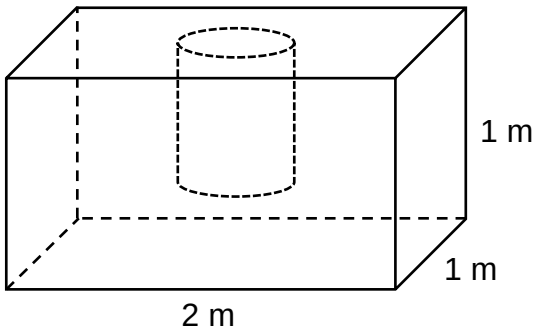

The cylindrical hole left behind is then filled with a metal of density 12 g/cm^3
The resulting cuboid has a density of 1 g/cm^3

Work out a range of possible values for h, the height of the cylinder.

SUBMISSION DEADLINE 19/2/23 – 7PM

Video Solution

All submissions to be emailed to 1stclassmaths@gmail.com

Full terms and conditions: www.1stclassmaths.com/spicy-questions